EMT Magnetostrictive Level Transmitter is a float type level sensor to be used measuring the level of liquids; designed especially for the difficult processes. Mounts vertically and can locate the very middle point of two opposite magnetic force fields by emitting signals. Therefore, no calibration or adjustment will be needed after the first set, even with the power cuts. Furthermore, it's sensing element is in the body which prevents the wearing effects of the usage, sustains long term durability by avoiding the physical contact.

Areas of application :

Fuel Industry : Gasoline, diesel and liquid natural gas applications
Chemical Liquid Facilities : Pharmaceutical industries, biological engineering and similar chemical liquid mixing tanks
Water Management Facilities : Dam, Waste water sanitation facilities for real time monitoring
Food and Beverage Facilities : High sensitivity level monitoring for tanks contains liquid

EMT

MAGNETOSTRICTIVE LEVEL TRANSMITTER

EMT

Advantages :

* High accuracy / precision (16 bit)
* Long-working use
* Short response time
* Output signal options
* Easy setup
* IP66 Protection class

Model : 68-2026-003

Technical Specifications :

Material to Measure	Liquid
Power Supply	24 VDC ±10%
Output	0...10V, 4...20mA, 0...20mA, 10...0V, 20...4mA, 20...0mA
Resolution	16 bit DAC Output ±0,02% Full Measurement (Min. 100 µm)
Repeatability	±0,005% Full Scale
Measuring Length (L)	100...5000mm
Velocity	< 10m/s
Sampling	2 kHz (Value can change by stem lenght.)
Max. Consumption	50mA -90mA (Value can change by stem lenght.)
Max. Output Noise	< 5 mVpp
Max. Output Value	10.5 V
Update Time	0,5 ms...1000 m / 0,8 ms...2000 m
Permissible Applied Voltage	Available (up to -30 VDC)
Over Voltage Protection	Available (up to 40 VDC)
Connection (R)	M18 x 1,5 mm Std.
Housing Material	Aluminium
Connection Material	304 Stainless steel Std.
Pipe Material	304 Stainless steel Std.
Electrical connection	Cable, M12-5Pin Socket
Protection Class (EN 60529)	IP 66
Test	EMC , Low Voltage
Mak. Tencile Force	Max. 40 Nm
Working Temperature	Max. 125 °C Opt. 150 °C
Working Pressure	Max. 30 bar
Ambient Temperature	(-)20°C / (+) 60°C

Applications Example :

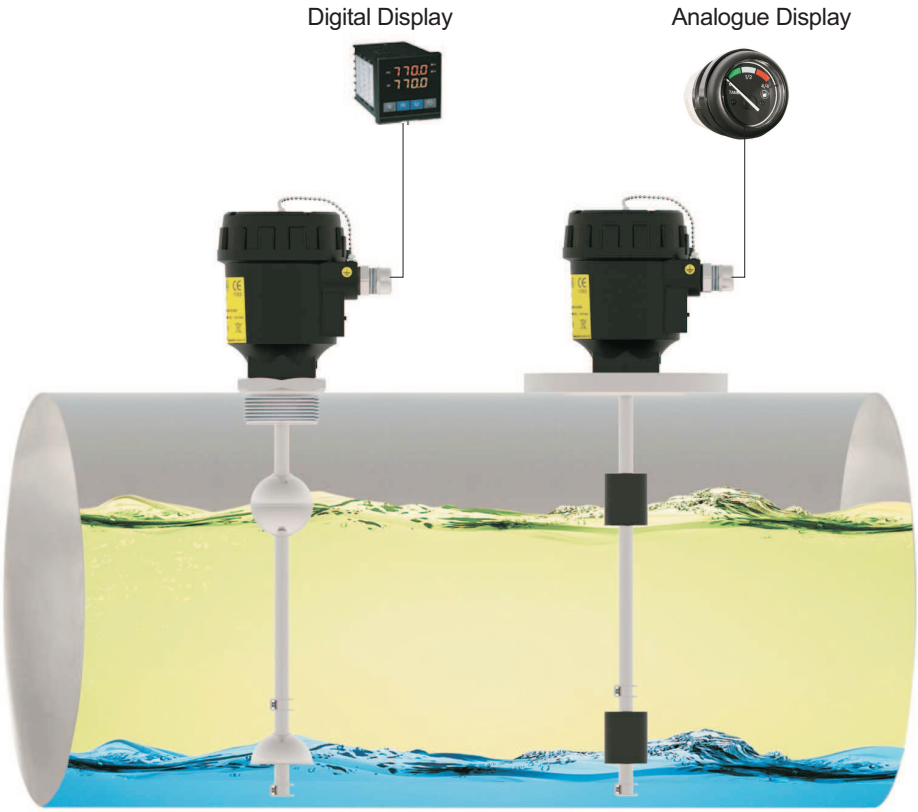

Housing :

ORDER CODE	TYPE	MATERIALS	PROTECTION CLASS	TEMPERATURE (ºC)	DIMENSION a x b x c (mm)
604	B20x	Aluminium	IP 66	(-) 40...(+) 200	132 x 104
104	B20p	Plastic	IP 65	(-) 40...(+) 150	132 x 104

Aluminium

B20x

Protection Case :

Material: 304 Stainless steel
Welded Production
Opening - Closing Hinged
For protection of switch from external conditions.

Parts :

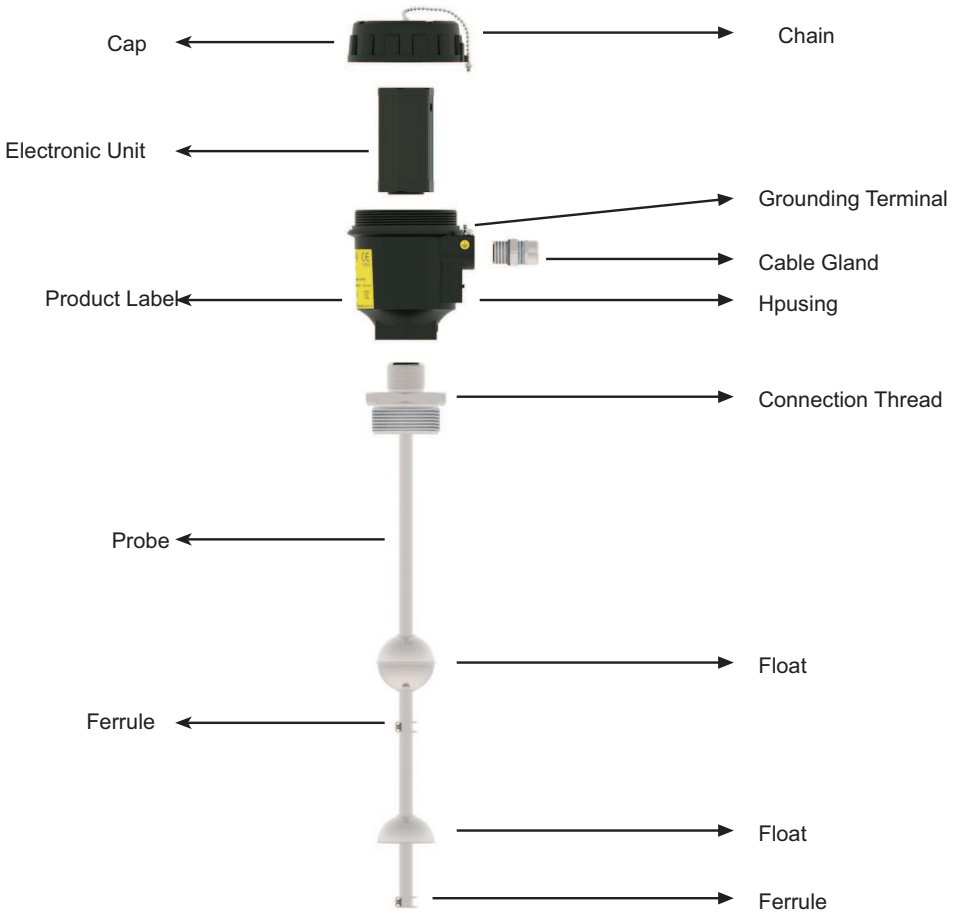

Product Label :

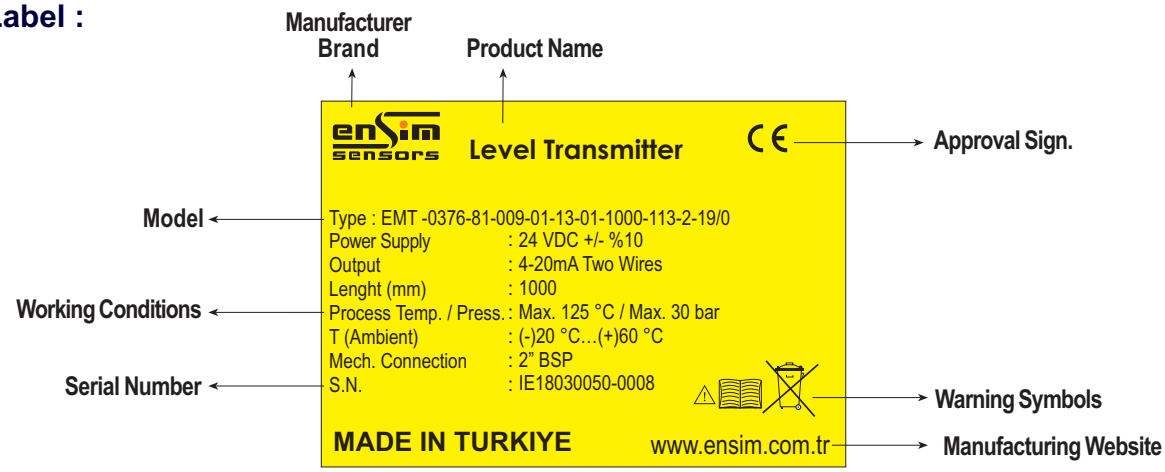

Electrical Connection :

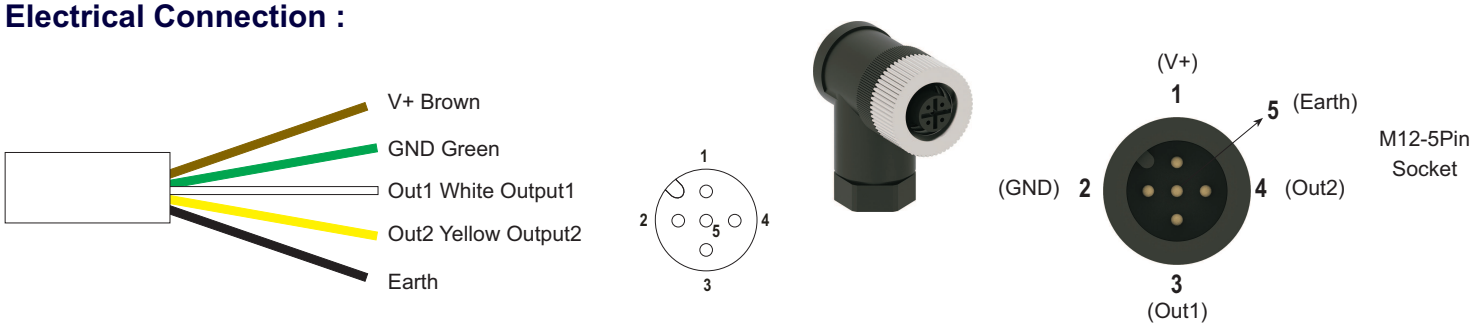

Float :

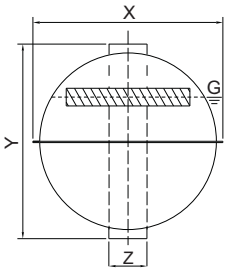

S5A / S6A
S40A / S41A / S53A

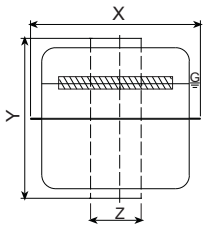

S1Y / S1A / S7A / S17A
S10Y / S11A / S54A

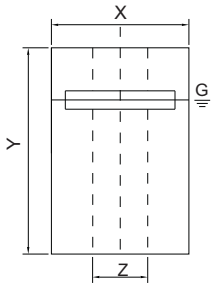

P6 / P7 P9

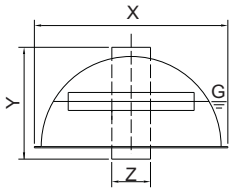

S42A / S52A

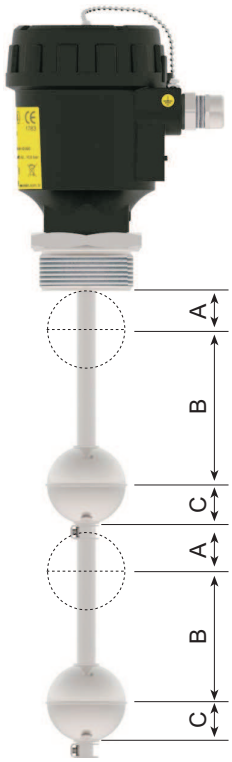

Minimum Distances

ORDER CODE	TYPE	MATERIAL	X	Y	Z	PIPE DIAMETER	MAX. PRESSURE (bar)	MAX. TEMPERATURE (°C)	DENSITY (g/cm³)	A	B	C
0104	S5A	316 St. St.	73	73	20	16	30	150	0.65	50	99	50
0105	S6A	316 St. St.	73	73	17	15	30	150	0.65	50	99	50
0106	S7A	316 St. St.	43	52	15	13	30	150	0.88	34	68	34
0111	S17A	316 St. St.	52	35	15	13	30	150	0.85	39	78	39
0113	S40A	316 St. St.	55	55	15	13	30	150	0.80	42	82	42
0114	S41A	316 St. St.	55	55	15	13	30	150	0,9	42	82	42
0115	S42A	316 St. St.	55	30	15	13	20	150	1,2	42	55	42
0118	S52A	316 St. St.	73	40	20	16	20	150	0,9	50	65	50
0119	S53A	316L St. St.	52,5	50,2	15,5	14	10	200	0,6	42	82	42
0120	S54A	316L St. St.	51	61,2	15,5	14	10	200	0,47	50	90	50
0203	P6	PU	35	42	15	13	1	80	0.65	35	65	40
0204	P7	PU	44	50	18	15	1	80	0.40	38	70	50
0213	P9	PP	46	44	17	15	5	80	0.65	38	76	38

All dimensions are stated as mm.

Mechanical Connections:

Thread

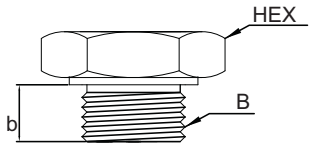

Order Code	(ISO228-1) Dimension B	HEX (mm)	Thread Length b (mm)
0006	1” BSP	41	23
0007	1 1/4” BSP	51	23
0008	1 1/2” BSP	60	23
0009	2” BSP	70	23
0085	M18x1,5	46	25
0086	M20x1,5	46	25

Flanged

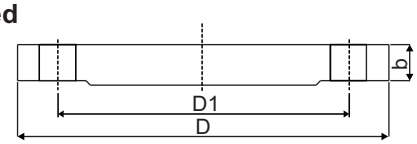

Order Code	(ISO1092-1) PN 16	D (mm)	D1 (mm)	b (mm)
0502	DN 25	165	85	16
0503	DN 32	140	100	16
0505	DN 50	165	125	18
0507	DN 80	200	160	20
0508	DN100	220	180	20

Order Code	(ISO1092-1) PN 40	D (mm)	D1 (mm)	b (mm)
0702	DN 25	115	85	18
0703	DN 32	140	100	20
0705	DN 50	165	125	20
0707	DN 80	200	160	20
0708	DN 100	235	190	24

Order Code	(ANSI B16.5) 150 LBS	D (mm)	D1 (mm)	b (mm)
1005	DN 50	152,4	121	19
1006	DN 65	177,8	139,7	22,2
1007	DN 80	190,5	152,4	23,8
1008	DN 100	228,6	157,2	23,8

Clamp

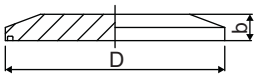

Order Code	(ISO2852) Dimension	D (mm)	b (mm)
1501	DN 32	50,5	15
1502	DN 50	64	17
1503	DN 65	91	17

Dairy

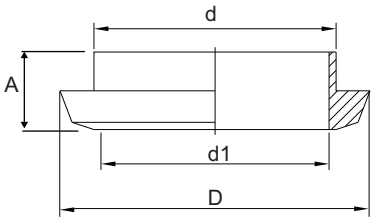

Order Code	Dimension	Dimension	D (mm)	d1 (mm)	A (mm)
1600	DN 40	DN 40	56	48	13
1601	DN 50	DN 50	68	61	14
1602	DN1 00	DN 100	121	114	20

Sample Models:

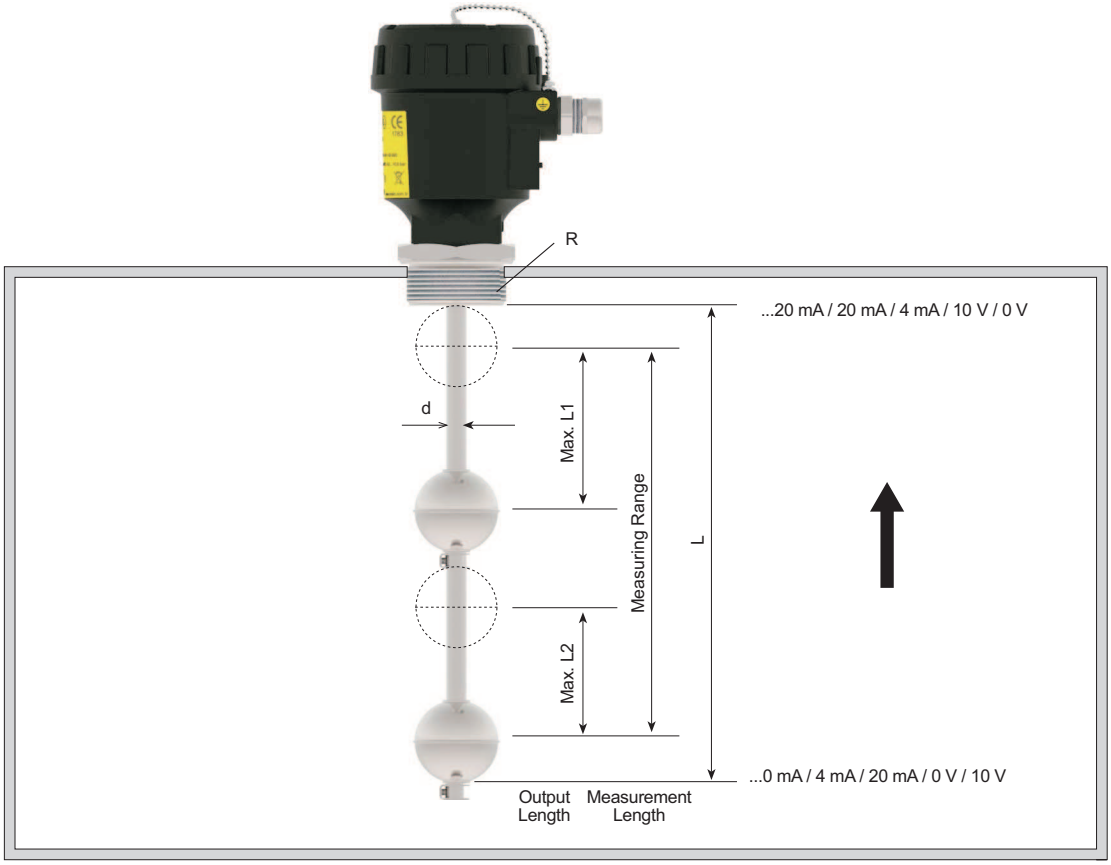

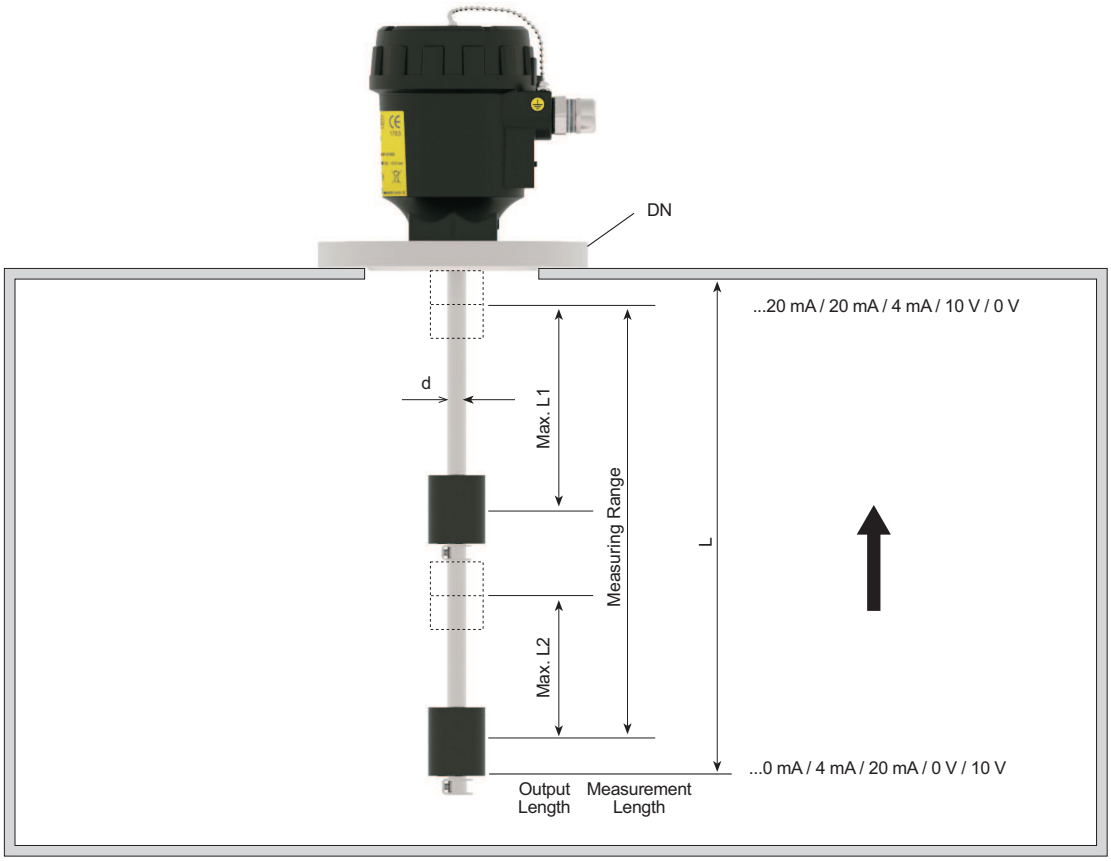

Order Form : Please consider sample models when coding

1 MODEL

Standard Version.....EMT

2 CERTIFICATE

None.....0

(EN10204-3-1) Material Certification.....1

3 HOUSING

Aluminium Housing , B20x 604

Plastic Housing , B20p 104

4 ELECTRICAL CONNECTION

M12-5 Pin.....71
PVC Cable (Max. 60 °C).....80
PVC Cable (Max. 105 °C).....81
Silicon Cable (Max. 200 °C).....82

PTFE Cable (Max. 230 °C).....83
Special Cable.....x
Special Socket.....x

5 CONNECTION

Thread (ISO 228-1)	Clamp (ISO 2852)	ISO Flange(1092-1)	ISO Flange (1092-1)	ASA Flanged (B16.5)
1/2" BSP.....0004	DN 25 - PN 16 ... 0502	DN 25 - PN 16...0502	DN 25 - PN 40...0702	DN 50 - 150lb ... 1005
3/4" BSP 0005	DN 32 - PN 16 ... 0503	DN 32 - PN 16...0503	DN 32 - PN 40...0703	DN 65 - 150lb ... 1006
1" BSP.....0006	DN 50 - PN 16 ... 0504	DN 50 - PN 16...0505	DN 50 - PN 40...0705	DN 80 - 150lb ... 1007
1 1/2" BSP.....0010		DN 80 - PN 16...0507	DN 80 - PN 40...0707	DN 100 - 150lb ... 1008
2" BSP.....0012		DN 100 - PN 16...0508	DN 100 - PN 40...0708	
1/2" NPT.....0203				
3/4" NPT.....0204				

6 CONNECTION MATERIAL

304 Stainless Steel 001
316 Stainless Steel.....002

Special.....x

7 PIPE DIAMETER (mm) d

12.7 mm / 13 mm.....13

Special.....x

8 PIPE MATERIAL

304 Stainless Steel 001
316 Stainless Steel.....002

Special.....x

9 STEM LENGHT (mm) L

.... mm

Note: From the connection, including the thread.

10 FLOAT TYPE

Select from table

Note: It must be selected according to the connection and radius.

11 NUMBER OF FLOAT

Select from table

Note: From the connection, including the thread.

12 OUTPUT (In Both)

4-20 mA Two Wires.....19
4-20 mA Three Wires.....20

0-10 V Three Wires.....21
0-20 mA Three Wires.....22
Special.....x

13 OPTIONAL

None...../ 0
Shelter (for the outside of the tank) 304 St.St... / K

Special.....x

SAMPLE

EMT -604-81-0012-001-13-001-1000mm-0113-2-19/0

Magnetostrictive Level Transmitter , 2" BSP , L=1000mm , Two Ø52 Float / 4-20mA

LONCA MAK.SAN.TİC.A.Ş.
Ferhatpaşa Mah. 37 Sok. No:78A 34888 Ataşehir - İSTANBUL / TÜRKİYE
Phone : +90 216 50 50 555 / E-Mail : lonca@ensim.com.tr Web : www.ensim.com.tr