Electro-magnetic flowmeters are commonly preffered in flow measure of conductive liquids. Electro-magnetic flowmeters returns volumetric values as L/sec. , L/min. , L/h. , m³/sec., m³/min., m³/h. Electromagnetic method is based on Faraday's Law of Induction. Due to following aspects, electromagnetic flowmeters are advantages: Not-including moving part, wet part's material are optional for different liquids, no pressure loss, showing excellent performance. Electromagnetic flowmeters outputs current flow and total flow thus; with the help of electrical signals returns data of flow to the system.

**Applications :**
Treatment Plants, Chemical, Petrochemical Industry, Food Sector, Textile Industry, Paper Production Sector, Power Plants, Water Distribution Networks  Agricultural irrigation sector.

# EFM

## E/M FLOWMETER

**EFM ...**

**Advantages :**
Economical
Easy Setup
Encrypted menu

CE

Model : 48-2026-003

**Technical Specifications :**

| | |
|---|---|
| Fluid | Liquids |
| Flow Range | 0,0045 m³ to 113094 m³ |
| Pipe Diameter | DN 10 ... DN 2400 mm |
| Speed Measure Interval | 0.1 m/sec to 10 m/sec |
| Body Material | Aluminium Alloy,<br>Opt. 304 Stainless Steel , 316 Stainless Steel |
| Sensor Material | 316 Stainless Steel<br>Opt. Hastelloy C, Hastelloy B, Titanium, Tantalum |
| Wet Part Material | PTFE or Rubber |
| Temperature Interval | (-) 20 °C / (+)150 °C PTFE ;<br>(-) 20 °C / (+) 60 °C Rubber |
| Sensitivity | 0.2 % High Sensitivity |
| Humidity Interval | 5 – 95 % RH |
| Minimum Conductivity | 20 µS |
| Connection | Flange Connection |
| Supply | 85...265 VAC or 24 VDC |
| Protection Class | IP 67 Opt. IP 68 |
| Output | Pulse, Analog, RS 485, Relay |
| Sample Interval | 0.2 secs to 100 secs Daily |
| Record | Weekly, Monthly, Annually Total |
| Display | Compact IP 67<br>Opt. External Wall Mounting IP 68<br>Current and total Flow Display 3 x 16 mm<br>Alphanumeric Character , Background Lighting<br>LCD Display |
| Alarm | Empty Pipe , Sensor Status |

**Flow Values:**

| DN mm | Model | Min. Measurement m³ / h | Max. Measurement m³ / h | Flange Connection | Pressure Class |
|---|---|---|---|---|---|
| 10 | EFM 10 | 0,0283 | 2,8274 | Ø 10 | 4.0 MPa (40 bar) |
| 15 | EFM 15 | 0,0636 | 6,3615 | Ø 15 | 4.0 MPa (40 bar) |
| 20 | EFM 20 | 0,1131 | 11,3094 | Ø 20 | 4.0 MPa (40 bar) |
| 25 | EFM 25 | 0,1767 | 17,6709 | Ø 25 | 4.0 MPa (40 bar) |
| 32 | EFM 32 | 0,2895 | 28,9521 | Ø 32 | 4.0 MPa (40 bar) |
| 40 | EFM 40 | 0,2895 | 452376 | Ø 40 | 4.0 MPa (40 bar) |
| 50 | EFM 50 | 0,7068 | 70,6838 | Ø 50 | 4.0 MPa (40 bar) |
| 65 | EFM 65 | 1,1946 | 119,4555 | Ø 65 | 4.0 MPa (40 bar) |
| 80 | EFM 80 | 1,8095 | 180,9504 | Ø 80 | 4.0 MPa (40 bar) |
| 100 | EFM 100 | 2,8274 | 282,753 | Ø 100 | 1.6 MPa (16 bar) |
| 125 | EFM 125 | 4,4177 | 441,7734 | Ø 125 | 1.6 MPa (16 bar) |
| 150 | EFM 150 | 6,3615 | 636,1538 | Ø 150 | 1.6 MPa (16 bar) |
| 200 | EFM 200 | 11,3094 | 1130,94 | Ø 200 | 1 MPa (10 bar) |
| 250 | EFM 250 | 17,6709 | 1767,0938 | Ø 250 | 1 MPa (10 bar) |
| 300 | EFM 300 | 25,4462 | 2544,615 | Ø 300 | 1 MPa (10 bar) |
| 350 | EFM 350 | 34,635 | 3463,5038 | Ø 350 | 1 MPa (10 bar) |
| 400 | EFM 400 | 45.2376 | 4523,76 | Ø 400 | 1 MPa (10 bar) |
| 500 | EFM 500 | 70,6838 | 7068,375 | Ø 500 | 1 MPa (10 bar) |
| 600 | EFM 600 | 101,7846 | 101784600 | Ø 600 | 1 MPa (10 bar) |
| 700 | EFM 700 | 138,5402 | 13854,015 | Ø 700 | 1 MPa (10 bar) |
| 800 | EFM 800 | 180,9504 | 18095,04 | Ø 800 | 1 MPa (10 bar) |
| 900 | EFM 900 | 229,0154 | 22901,535 | Ø 900 | 1 MPa (10 bar) |
| 1000 | EFM 1000 | 282,735 | 28273,5 | Ø 1000 | 1 MPa (10 bar) |
| 1100 | EFM 1100 | 1026.3 281 | 34210,935 | Ø 1100 | 0.6 MPa (6 bar) |
| 1200 | EFM 1200 | 1221,4152 | 40713,84 | Ø 1200 | 0.6 MPa (6 bar) |
| 1400 | EFM 1400 | 1662,4818 | 55416,06 | Ø 1400 | 0.6 MPa (6 bar) |
| 1500 | EFM 1500 | 1908,4613 | 6361S,3750 | Ø 1500 | 0.6 MPa (6 bar) |
| 1600 | EFM 1600 | 2171,4048 | 72380,16 | Ø 1600 | 0.6 MPa (6 bar) |
| 1800 | EFM 1800 | 2748,1842 | 91606,14 | Ø 1800 | 0.6 MPa (6 bar) |
| 2000 | EFM 2000 | 3392,82 | 113094 | Ø 2000 | 0.6 MPa (6 bar) |
| 2200 | EFM 2200 | 4105,3122 | 136843,74 | Ø 2200 | 0.6 MPa (6 bar) |
| 2400 | EFM 2400 | 4885,6608 | 162855,36 | Ø 2400 | 0.6 MPa (6 bar) |

| DN mm | Pressure Class | Device Exterior Diameter | | | Flange Connection Dimensions | | |
|---|---|---|---|---|---|---|---|
| | | a | b | c | D | Do | n x a |
| 10 | 4.0 MPa (40 bar) | 150 | 322 | 82 | 90 | 60 | 4-Ø14 |
| 15 | | 150 | 322 | 82 | 95 | 65 | 4-Ø14 |
| 20 | | 150 | 322 | 78 | 105 | 75 | 4-Ø14 |
| 25 | | 150 | 312 | 78 | 115 | 85 | 4-Ø14 |
| 32 | | 150 | 327 | 74 | 135 | 100 | 4-Ø18 |
| 40 | | 150 | 335 | 74 | 145 | 110 | 4-Ø18 |
| 50 | | 200 | 354 | 86 | 160 | 125 | 4-Ø18 |
| 65 | | 200 | 366 | 92 | 180 | 145 | 8-Ø18 |
| 80 | | 200 | 385 | 92 | 19S | 160 | 8-Ø18 |
| 100 | 1.6 MPa (16 bar) | 250 | 406 | 114 | 215 | 180 | 8-Ø18 |
| 125 | | 250 | 436 | 114 | 245 | 210 | 8-Ø18 |
| 150 | | 300 | 465 | 136 | 280 | 240 | 8-Ø23 |
| 200 | 1.0 MPa (10 bar) | 350 | 518 | 156 | 335 | 295 | 8-Ø23 |
| 250 | | 400 | 570 | 202 | 390 | 350 | 12-Ø23 |
| 300 | | 500 | 620 | 230 | 440 | 400 | 12-Ø23 |
| 350 | | 500 | 675 | 278 | 500 | 460 | 16-Ø23 |
| 400 | | 600 | 733 | 320 | 565 | 515 | 16-Ø25 |
| 450 | | 600 | 782 | 374 | 615 | 565 | 20-Ø25 |
| 500 | | 600 | 835 | 388 | 670 | 620 | 20-Ø25 |
| 600 | | 600 | 940 | 408 | 780 | 725 | 20-Ø30 |
| 700 | | 700 | 1048 | 520 | 895 | 840 | 24-Ø30 |
| 800 | | 800 | 1160 | 580 | 1010 | 950 | 24-Ø34 |
| 900 | | 900 | 1260 | 660 | 1110 | 1050 | 28-Ø34 |
| 1000 | | 1000 | 1370 | 720 | 1220 | 1160 | 20-Ø34 |
| 1200 | 0.6 MPa (6 bar) | 1200 | 1585 | 1130 | 1405 | 1340 | 32-Ø34 |
| 1400 | | 1400 | 1810 | 1260 | 1630 | 1560 | 36-Ø36 |
| 1600 | | 1600 | 2040 | 1450 | 1830 | 1760 | 40-Ø36 |
| 1800 | | 1800 | 2250 | 1640 | 2045 | 1970 | 44-Ø39 |
| 2000 | | 2000 | 2460 | 1820 | 2265 | 2180 | 48-Ø42 |
| 2200 | | 2200 | 2670 | 1990 | 2510 | 2390 | 52-Ø45 |

**Dimensions :**

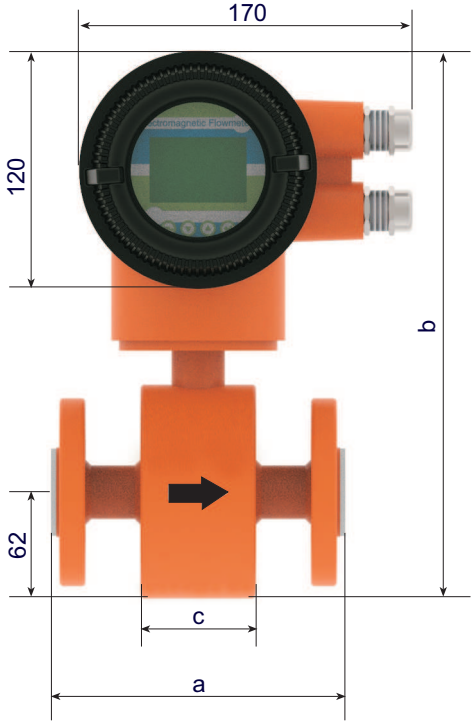


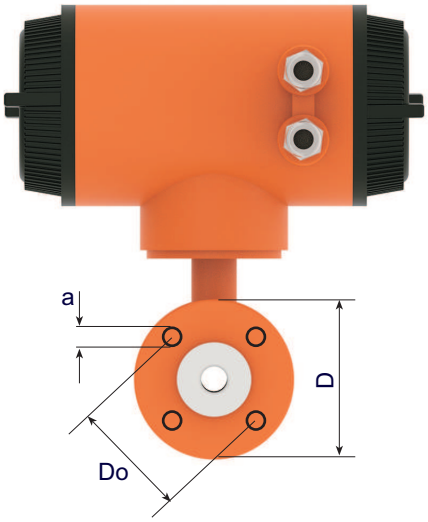


DN 10 ... DN 25

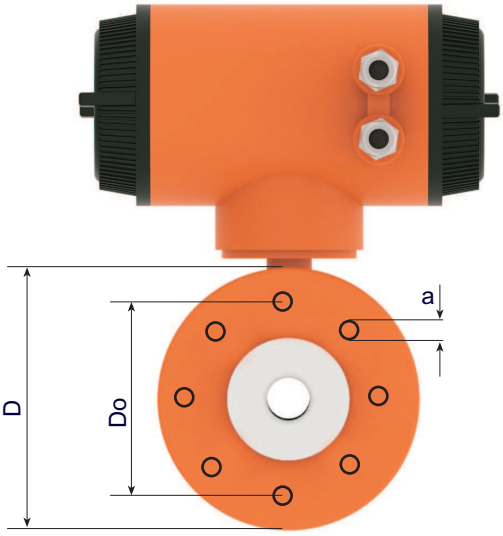


DN 32 ... DN 2200

**Order Form : Please consider sample models when coding.**

## MODEL EFM

### 1 LINE SIZE (Diameter)

DN 10 .....10
.
.
.
DN 2400 .....2400

### 2 ELECTRODE FORM

4 Electrode.....1
2 Electrode.....2

### 3 ELECTRODE TYPE

316L Stainless Steel.....003
Platinum.....053
Hastelloy B / C.....054
Tantalum.....055
Titanium.....051

### 4 INSIDE LINING (COATING)

Rubber.....081
Polyurethane Rubber.....071
PTFE.....066

### 5 PRESSURE CLASS

40 bar.....1
16 bar.....2
10 bar.....3
6 bar.....4
2,5 bar.....5

### 6 WORKING TEMPERATURE

< 60 °C.....1
< 120 °C.....2

### 7 GROUNDING

Yes.....1

### 8 DISPLAY

Compact.....1
With Cable (External).....2

### 9 PROTECTION CLASS

IP 67.....0
IP 68.....1

### 10 BODY MATERIAL

Casting.....098
304 Stainless Steel.....001

### 11 FLANGE MATERIAL

Casting.....098
304 Stainless Steel.....001

### 12 SUPPLY VOLTAGE

220 VAC.....0
24 VDC.....1

### 13 OPTIONAL

None.....0
HART.....1

## EXAMPLE

EFM 1200 - 1 - 003 - 066 - 1 - 1 - 1 - 2 - 0 - 098 - 098 - 0

EFM E / M Flowmeter DN 200 , PTFE Coated 40 bar , IP 65 , With Cable , 220 VAC Supply

LONCA MAK.SAN.TİC.A.Ş.
Ferhatpaşa Mah. 37 Sok. No:78/A 34888 Ataşehir - İSTANBUL / TÜRKİYE
Phone: +90 216 50 50 555 / E-Mail : lonca@ensim.com.tr Web : www.ensim.com.tr